Chapter 10
The Collector Conundrum

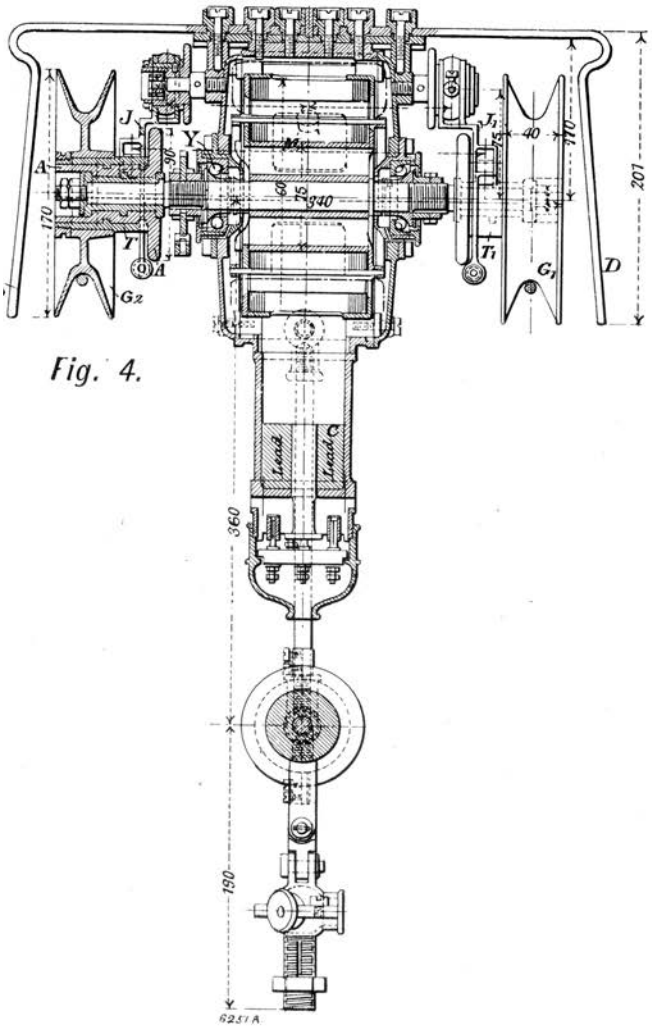

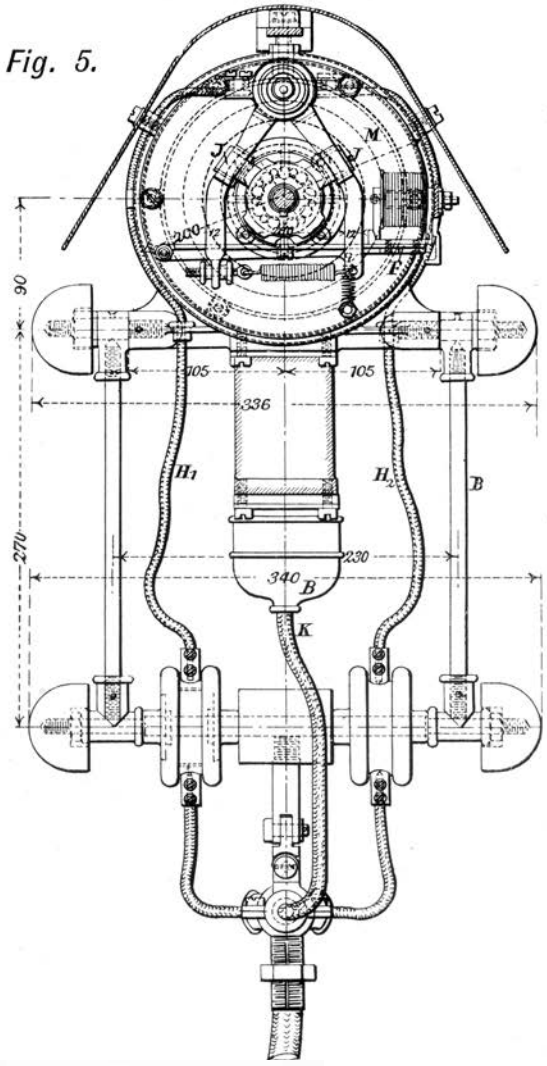

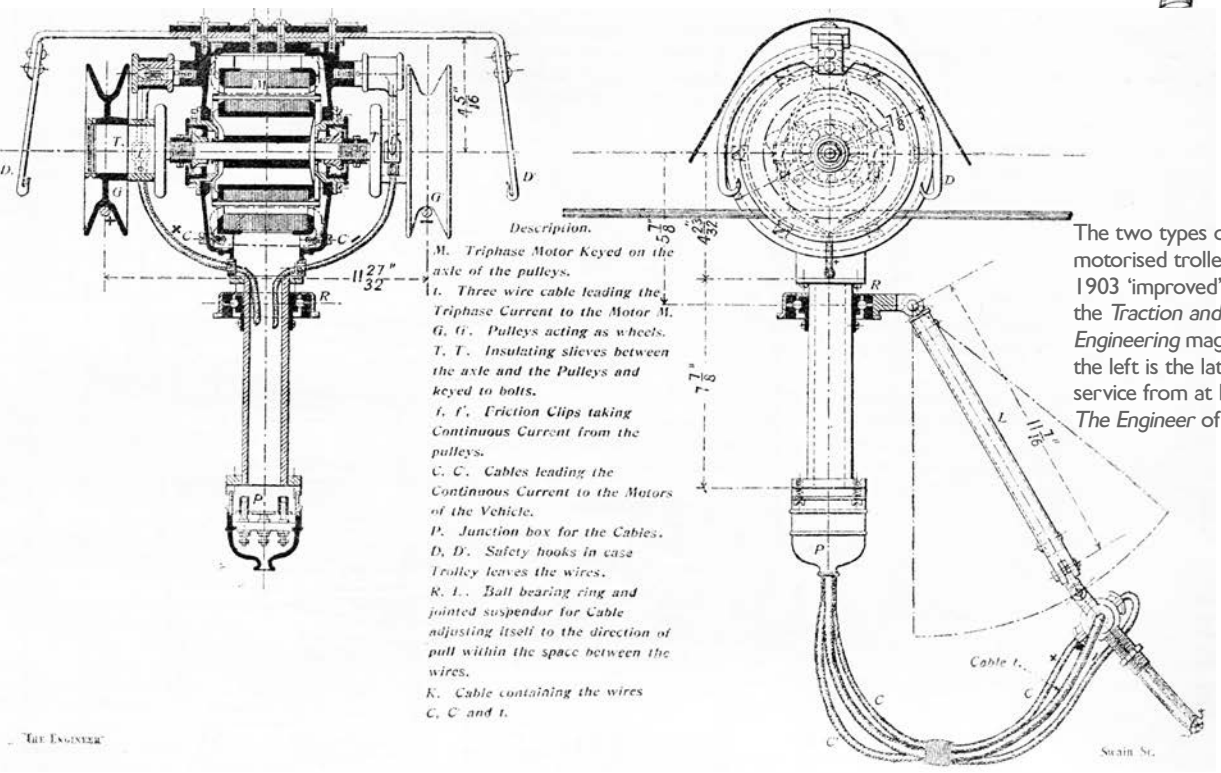

The two types of the second Lombard-Gerin motorised trolley collector. Above is the 1903 'improved' type that was published in the *Traction and Transmission* supplement of *Engineering* magazine of October 1903. On the left is the later 'refined' type that saw service from at least 1904 and was detailed in *The Engineer* of September 1905.

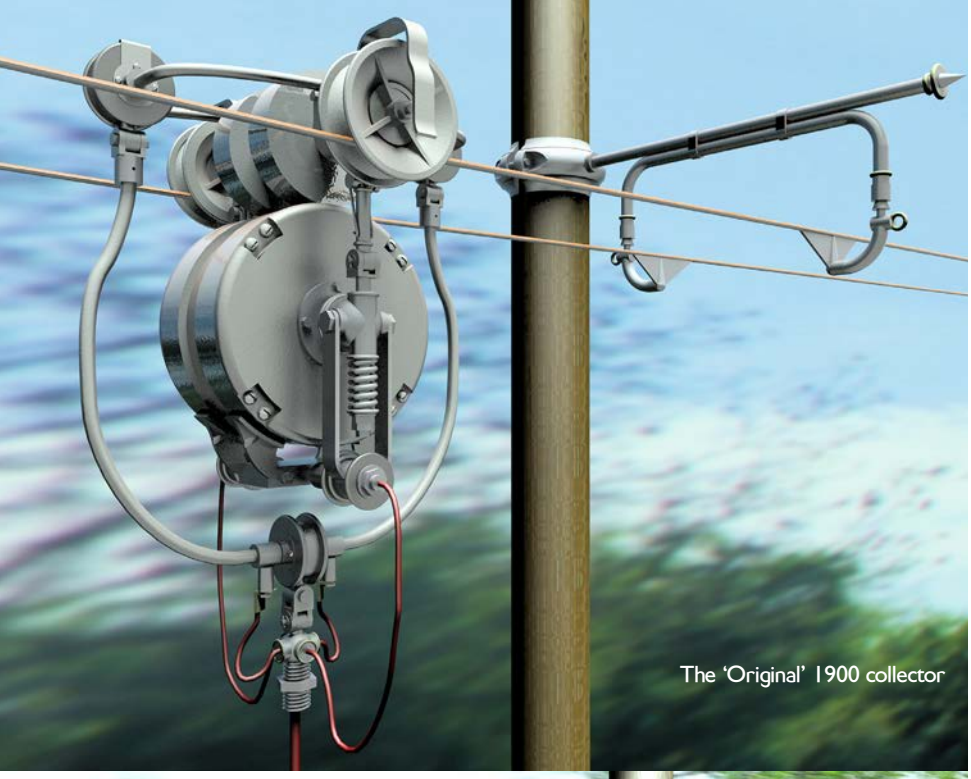

The 'Original' 1900 collector

The 'Improved' 1903 collector

The 'Refined' 1904 collector

Further research suggests a subtle refinement to the story of the development of the second 'improved' Lombard-Gerin collector, designed by René Koechlin to improve reliability by dispensing with the friction drive to the trolley wheels (see page 60). The *Traction and Transmission* supplement to *Engineering* magazine of 1903, published in October, has an article on the Trolley Omnibus, detailing the new collector and including illustrations. There are various differences to the trolley shown in *The Engineer* of September 1905, ie. the 'cable suspension device' or square frame carrying three wire assemblies below the motor disappears in the later refined version, replaced by a pivoting 'suspendor' or rod that carries six separated wires down to the vehicle. The junction box for the wires becomes suspended 120mm lower on a thinner tube and safety hooks, following the shape of the motor, replace a simple bent bar, that had been, presumably, insufficiently effective at catching a dewiring trolley. The brake pivots, near the top of the trolley wheels are redesigned and the main current conductors are more neatly re-routed.

Delving into the fog of press report spin does not make clear exactly where and when the 'Improved' and the final 'Refined' versions of the second collector type were deployed. Apart from the photograph in the *Traction and Transmission* supplement, no evidence shows the earlier 'Improved' version in service, although interpreting early photographic reproductions is not definitive. The critical images at Montauban and Alluach seem to show the original Lombard-Gerin collector, described by René Koechlin as 'now enshrined practice'. Certainly the clearest depict the tell-tale lower motor and large cable suspension loop of the 'Original' version. It's seen in the picture in *Western Electrician* in April 1904, despite mention of a 'new form' that has 'a frame for holding the wire', ie. the earlier 'improved' type. The December 1902 *Electrical World* article also mentions 'the trolley.... is to be improved', but in the context of easing the exchange of passing trolleys. One Allauch picture of 1903, is ambiguous and, in soft silhouette, seems to show a collector with a raised motor, with the simple bent bar for dewirement prevention and the pivoting rod that carries wires to the 'bus; a sort of hybrid version.

René Koechlin had been aware of the failings of the 'original' collector at Samois from letters sent to him by the Council in February 1902. His address to the annual conference of the Association for the Advancement of Science, held at Montauban in early August 1902, made no mention of pending improvements that he must have been at least thinking about, if not designing or physically testing. Presumably extolling the virtues of Trolley Automoteur to experts in the town where the biggest

Lombard-Gerin system was being installed, didn't need the suggestion of not being other than fully and reliably conceived. Construction of the Montauban system had started in April, but, despite cataloguing visits to local places of interest, there is no mention of a conference excursion to see the installation's progress in the official conference report. One senses a need to promote the Lombard-Gerin system at such an august occasion as France's greatest scientists meeting at the very place that was installing the most typical of intended markets for the trolleybus, but that delays in building it precluded demonstration before completion.

Apart from being the Administrator as well as engineer for Trolley Automoteur, René Koechlin, who was 36 in 1902, was, at the same time, working on a large and ambitious hydroelectric scheme at Kembs, north of Basel. In September, he appeared before the Samois Council and explained the nature of the collector design. Nonetheless, the Council minutes recorded it as being defective.

As the Montauban system opened in December 1902, it seems probable the pressure of work and a need to redevelop the collector meant that it wasn't available by the end of 1902. Perhaps the 'original' type Montauban collectors had already been assembled before construction had started nine months earlier and changing them would have contributed to the delays - the trolleybuses needed re-gearing of the transmission to use the second type of collector and conversion may have been put off by the operator.

The need to make the Montauban system successful would have been paramount in 1903, in order to save the Trolley Automoteur company, but at the end of 1902 the imperative was to get the system up and running, hence the initial use of the 'original' design. The same could have been expected at Allauch, that had opened by June 1902. Thus the photographs of the opening of both services show the first design of collector but the only other Allauch picture to show a collector, apparently from 1903, does show a type of 'refined' collector.

Ten months later, the *Traction and Transmission* supplement talks of Montauban as embodying the 'latest developments', ie. the second collector, and implying the 'improved' type rather than the later 'refined' development. The article doesn't illustrate Montauban, but talks of five cars being in use during 'holiday' time and using conductors and only four for 'ordinary' traffic when drivers collected fares. This might explain why Gallarate could have acquired at least one car before Montauban closed in 1904. Koechlin, in his presentation to the Electrical Union in 1903 mentions 6 cars including 2 spares. The article also mentions that the electric controller handle is (unusually) on 'the same shaft as the steering wheel'. Power consumption was said to be between 990 and 1300 watt-hours per car-mile because of stops every 200m and the gradients involved, compared to 740 and 1280 at Samois. Costs, with higher current use and a conductor, were .35Fr per car-kilometre compared to .285Fr at Samois. These costs were stated in publicity rather than being those that might actually have been incurred.

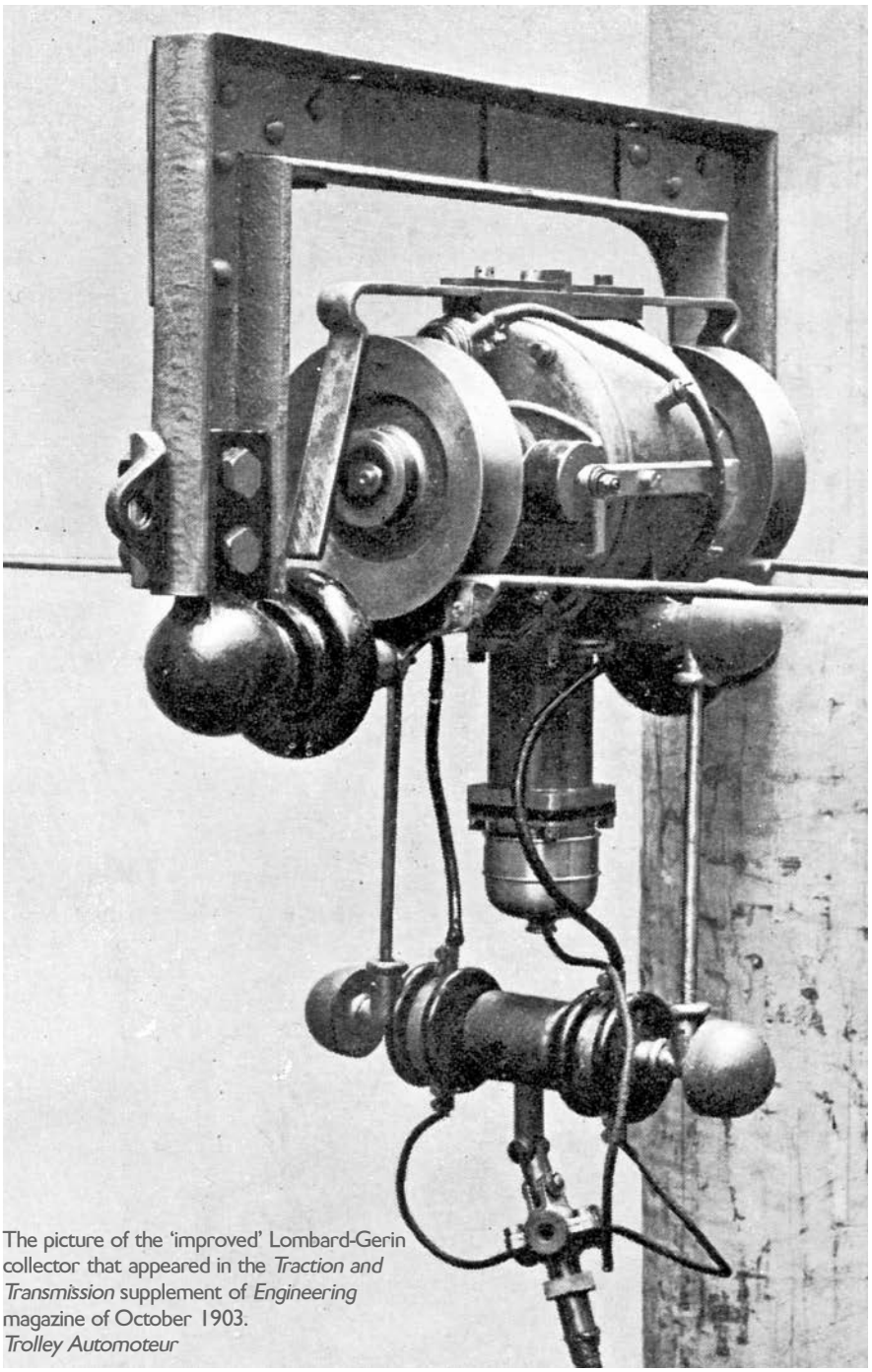

The picture of the 'improved' Lombard-Gerin collector that appeared in the *Traction and Transmission* supplement of *Engineering* magazine of October 1903.
Trolley Automoteur

René Koechlin's presentations in the summer of 1903 followed the pattern of his paper to scientists gathered in Montauban in 1902. He talked only of the operational advantages and under-stated power consumption by using Samois figures rather than the higher figures of Montauban. Tests of the second generation collector at Samois presumably returned comparable figures. In his paper to the Automobile Congress in September, he now talked of two cars at Samois, rather than one.

By April 1904, more than two years after the Samois complaints, the Gallarate system opened, seemingly with the second collector type, but fitted, and this is interpretation of unclear photographs, with the first 'improved' design rather than the second 'refined' type. There appears to be the square frame beneath the motor that is level with the overhead, and no pivoting rod guiding the wires that take power to and from the trolleybus. This makes

sense only if these collectors (as stated in the *Engineering* supplement) were indeed fitted on the Montauban system, from where the two Gallarate vehicles originated, instead of being fitted during their change of ownership. This hinges on the Samois trolleys only achieving a form of reliability by first using the 'improved' version of 1903 and then the third iteration, the 'refined' collectors of 1904, While it is possible that René Koechlin tested his first, 'improved' type at Samois during 1902 or, more likely, in 1903, all later postcards show the 'refined' version. Two pictures, taken before the present Patisserie was built, show the original collector. The December 1902 *Electrical World* article makes no mention of a new type of collector.

The only conundrum is why exactly there were two versions of the second collector design, as traffic in Samois achieved 'normal' service rates during 1903, before the 'refined' version was ready. While performance would be assumed to be the reason, it's possible cost or even design elegance were reasons, as well as greater reliability. *The Engineer* article of 1905 talks of 'simplification and cheapness' improvements. Perhaps a need to revise the way the connecting wires behaved under stress, when being jerked into motion, much as Ludwig Stoll was to later discover in Austria, meant the opportunity could be taken to further simplify and refine, without too much greater effort. Perhaps too, the exposed external wiring of the 'improved' version caused operational problems - perhaps snagging on the hangers when the trolley was removed. With hindsight, the 'improved' collector looks complex and a little unsophisticated - the external wiring shows signs of being a rushed solution. It inherits parts from the original type, such as the circular insulators, but is otherwise radically different and, considering vehicle transmission regearing and a new motor, must have cost a tidy sum to develop. That it was publicised, in October 1903, does suggest it was intended as 'the' solution and the service levels at Samois did improve. With the introduction of the final 'refined' version, service levels were even better. There was obviously a commitment to make the Lombard-Gerin system work well that continued into the refined version, even as the company was about to be liquidated. Whatever the reason for two second collector types, the changes didn't rejuvenate the company's prospects and only served to prolong operation at Samois and recover some capital outlay by being able to sell on to second-hand systems at Gallarate and St Malo, which, ultimately, had the final, 'refined' type.

While the Trolley Automoteur company was liquidated in December 1904 by René Koechlin, presumably on instruction from the board of Compagnie Generale d'Electricité, somebody was still able to supply Gallarate and St. Malo with equipment - perhaps it was Lombard-Gerin et Cie. Or, perhaps, CGE continued to operate Trolley Automoteur, but only to retrieve as much value as possible from existing equipment. Either way, the second collector had not saved the company as a going concern. It did, however, enable the heavily subsidised Samois operation to continue with a semblance of practicality until 1913, long after it was written off in the trade press, but only because of the seven year wrangling over the exact route of the replacing tram service.

1902	February	Samois complaints letter to René Koechlin, amelioration promised
	March	Copenhagen demonstration
	April	Allauch construction starts
	May	Montauban construction starts
	June	Allauch opening, using original collector
	July	Catalogue of failed Samois journeys sent to Koechlin
	August	Montauban conference, Street Railway Journal article
	September	Koechlin meets with Samois Council, talks of defective trolley
	October	Koechlin presents Kembs hydroelectric plans at Mulhouse
	November	Plans for Nice - Upper Monte Carlo with 6 wheel trolleybuses
	December	*Electrical World* article, collector handling 'to be improved'
1903	January	Montauban opening, using original collector
	February	
	March	
	April	second collector development assumed
	May	Puy-de-Dôme proposal
	June	Koechlin presentation to Syndicat des Usines d'Electricité
	July	Tetlow canal boat tests
	August	Second car in use at Samois
	September	Koechlin presentation to Congrès de l'Automobilisme, Paris
	October	*Engineering* magazine article, showing 'improved' collector
	November	Gallarate construction starts
	December	'improved' collector in use at Allauch?
1904	January	
	February	
	March	Only the 'Original' collector appears in *Western Electrician* article
	April	Gallarate opening, using second 'refined' collector
	May	Sermizelles to Vezelay proposal
	June	second 'refined' collector assumed to be in use in Samois
	July	Samois reports 'better results due to new equipment'
	August	Montauban closure decision
	September	
	October	
	November	
	December	Trolley Automoteur liquidation decision
1905	January	
	February	Samois operation passes to l'Lyonnais Omnium
	March	St Malo construction starts
	April	Gallarate closure
	May	Decision to replace Samois trolley by tram
	June	
	July	Louis Lombard-Gerin working on Lac d'Aiguebelette hydro scheme
	August	Closure of Allauch
	September	*The Engineer* article, detailing the 'refined' collector
	October	
	November	
	December	
1906	January	St Malo partial opening, with second 'refined' collector

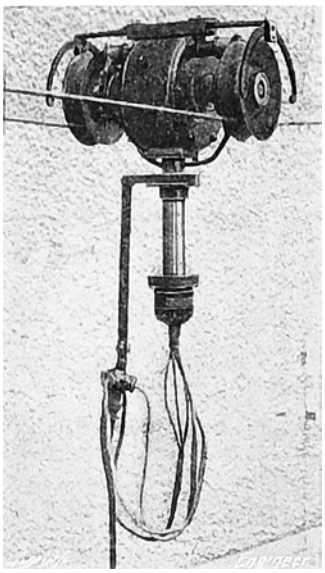

The final 'refined', or third iteration of the collector used on Lombard-Gerin trolleybuses, as pictured in the 'The Engineer' journal of September 1905 *Trolley Automoteur*

Not seen in a publication for 115 years is this posed (and retouched) view of the original Lombard-Gerin trolleybus at the rather poorly attended Vincennes annex of the 1900 Paris Exposition Universelle. *Trolley Automoteur*

A newly discovered picture of the Lombard-Gerin 2x8hp motor and transmission assembly with slip rings that fed the collector motor thought to be on the central axis, towards the centre, to the right of the left-hand armature. *Trolley Automoteur*

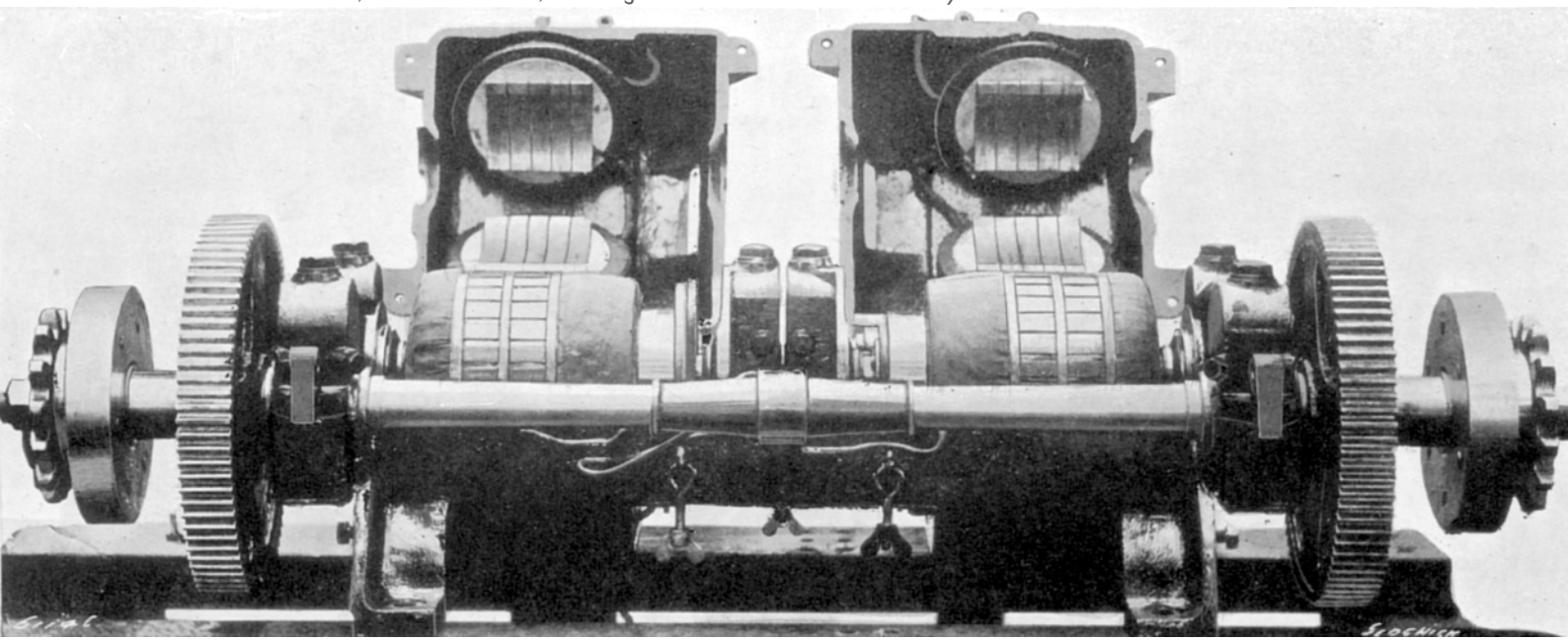

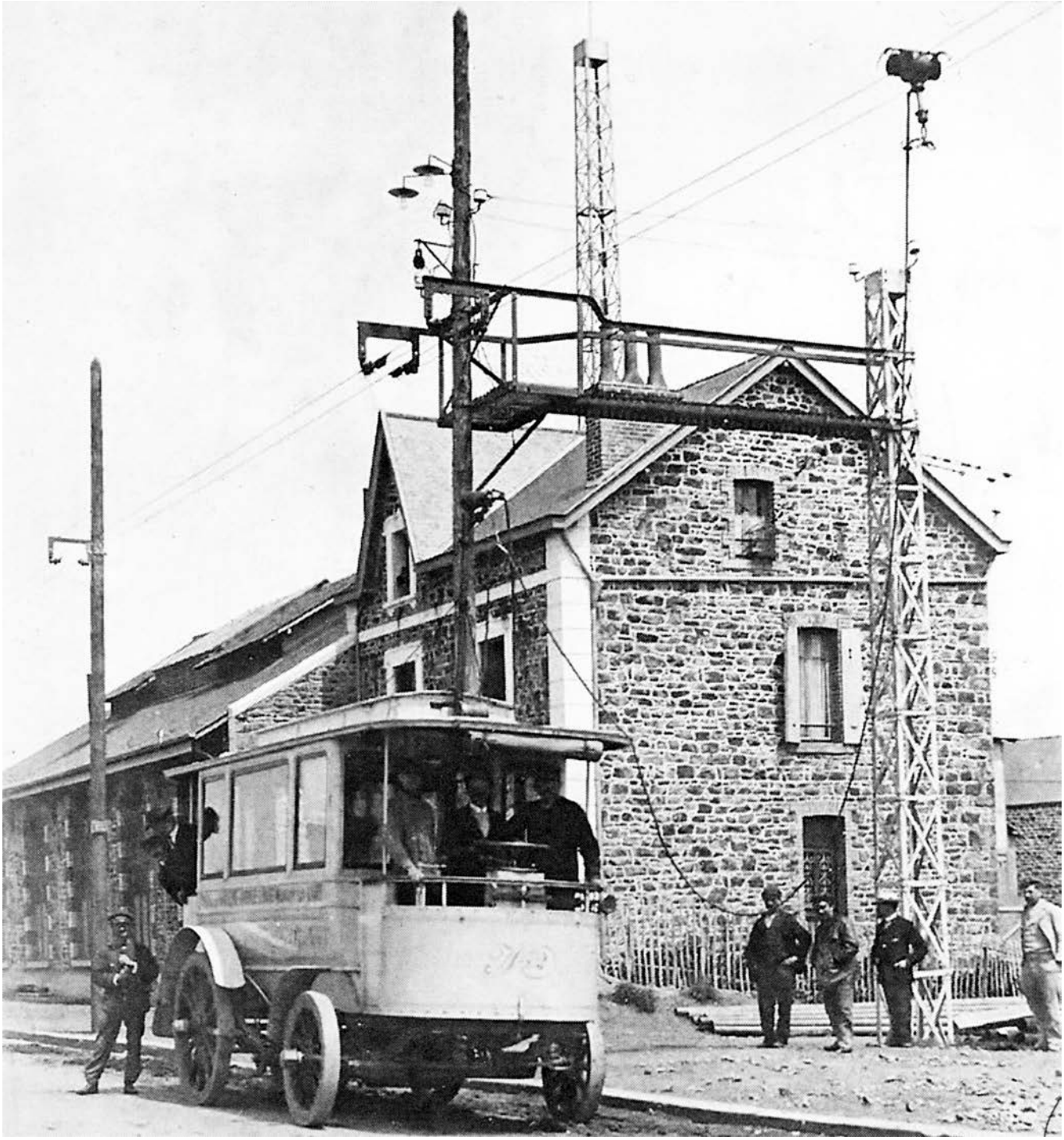

Tracteurs Electrique 2 seen beside station buildings at St. Malo, at a gantry structure used to aid collector removal and placement. The power supply is carried to the overhead via telephone-like insulators, a not uncommon method at the time. The over-extended cable connection to the trolleybus is brushing the roof and clearly shows the third iteration of the collector, the 'refined' type. *Ph. Valla col.*

The impact of the widespread publicity of the overwire Lombard-Gerin system, and, very soon afterwards, that of Schiemann's initial underwire installation at Königsstein, inspired electrical engineers in Europe and the United States to either 'improve' or to stake a claim on what was seen as a promising future technology that had not yet been completely defined. With urban street public transport, other than tramways, in a state of flux for the whole of the 1910s, with internal combustion, steam and battery technologies all uncertain and seen as compromised, there certainly existed very real promise in the idea of a trolleybus. If only the way electricity was collected could be finalised then its inventor could, like Sprague or Tesla, be seen as the 'father' of a persuasive benefit to mankind.

Most of the inventors, as far as we know, only tried to develop trolleybuses on paper, as patents, during the first decade of the 20th century. Maunsell Mercier (1863-1922), an experienced electrical engineer of Wilmslow in Cheshire, patented a single pole with a double trolleyhead in 1902, specifically for wheeled vehicles 'without the use of specially laid tracks', before Max Schiemann developed his similar idea (see page 102) and Edward Munro patented a similar system that he did not develop (see page 107). Mercier's design used standard tram components on a narrow but unspecified gauge between the wires. He also shows a 'shield' between the collector wheels out of a fear that there may be arcing between them and springs beneath them to compensate for uneven movements. The device would have worked but needed refinement for practicality, not least the difficulty of engaging two trolley heads at once onto the overhead. Unfortunately, Maunsell Mercier's company went into receivership in 1907.

Italian, Ettore Bauco of Rome, in a patent filed in August 1902 but not granted until October 1905, showed a three wire device above a trolleybus that looks remarkably like Lombard-Gerin's first vehicle. The four wheel trolley had a fifth pulley wheel that was pressed upwards by springs onto a third wire to provide against dewirement. There were connecting wires to upstands at the front and rear of the trolleybus that were 'flexible and elastic'. At least dewirement and long overhanging wires seem to have been avoided, but at the extra cost of a third wire.

Even after the 1904-5 Lombard-Gerin installation at Gallarate in Italy, Italian inventors Ricardo Arno and Luigi Negro of Turin filed a patent in 1906 for an alternative version, in which a powered overwire trolley system was kept ahead of the trolleybus that seemed to rely on an electromagnetic clutch to disconnect the trolley's motor from driving ahead when tension in the wires to the vehicle became too strong. Apart from little provision to prevent the trolley coming off the wires, the device seemed rather crude compared Lombard-Gerin's AC motored equivalent.

Meanwhile, the United States trade press had religiously followed European trackless developments while almost berating the lack of American development. Artemus Upham's trials had been followed (see page 113) but the vast General Electric company had, as with most potential electrical applications, been quietly working on trolleybus collector designs. One had appeared in *Scientific American* in 1902, essentially a development of Leo Daft's design for the Los Angeles tramway in the 1887 and Charles Van Depoele's Chicago 'Troller' of 1882, (see page 24), both rejected at the time as unreliable. In

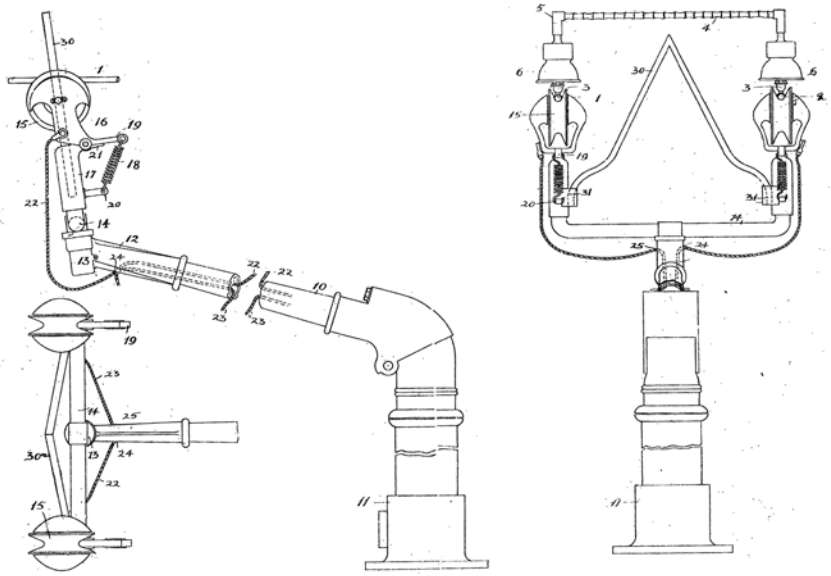

Maunsell Mercier's UK patent for a simple single boom collector for trackless vehicles, 1902.

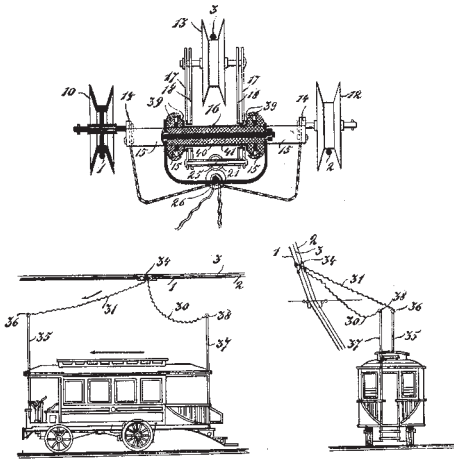

Ettore Bauco's patent of 1902 for a three wire overwire trolley system, showing a Lombard-Gerin look-a-like trolleybus.

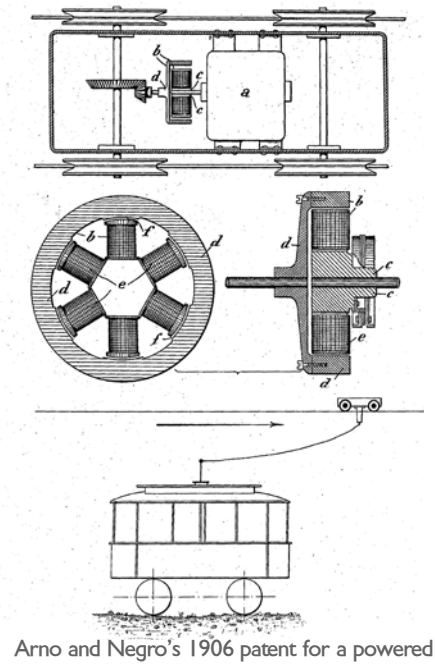

Arno and Negro's 1906 patent for a powered trolley, using an electric clutch to control its movement in front of the trolleybus.

any case, tramways had moved to electrically bonded rails to provide current return and thus only a single overhead positive wire - a trolley was no longer needed.

Possibly working from Louis Lombard-Gerin's nomenclature, Cie Générale de Constructions èlectriques, a company usually concerned with porcelain insulators and a subsidary of the large Thomson Houston concern, designed an 'auto-trolley' for electric vehicles in 1902. It featured a four pointed plate beneath the level of the conductors that was supposed to 'keep the wheels from jumping off'. The plate was seemingly horizontally turned by colliding with the overhead supports while a spring returned it to a usable position afterwards. This awkward device, that was not patented, had an underslung pivot that absorbed the initial jerk of starting forward motion and that carried the power to the vehicle. A counterweight also counteracted the sudden pull. These mechanical aspects were seen as an answer to the percieved weight problem of the Lombard-Gerin system that were thought to result in a greater number of traction poles being needed.

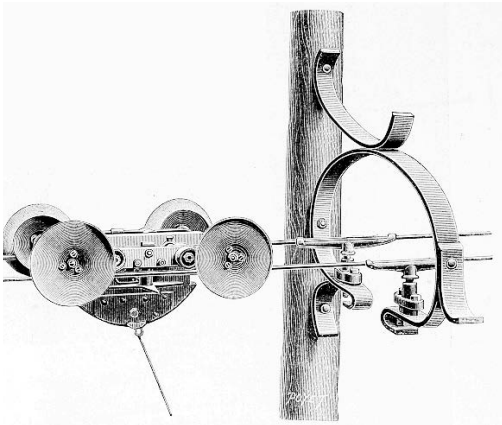

The CGEC 'Auto-trolley for electric vehicles' that appeared in *La Locomotion* in 1902 as an 'improvement' on Lombard-Gerin's system.

Like Carl Stoll, in Germany, Montraville M Wood, working in Schenectady, New York, at General Electric's head office and research centre, doggedly pursued the overwire carriage idea. His 1905 patent was more concerned with the problem of exchanging meeting trolleys on a single line, by using shuttles that swopped with each other as two trolleys engaged each other, using automatic latches. Quite how insulation was provided isn't altogether clear, nor was insuring the shuttles moved as intended, apart from by momentum, unless they were driven to a point where the two meeting trolleybuses had to pull their two latched trolleys apart. For General Electric to have worked on the overwire trolley was perhaps surprising given that they owned Frank Sprague's trolley boom patent rights; the design of which, as a considerable refinement of Van Depoeles early attempts, is credited with being the first successful, and much copied, trolley collector. It was also known by then in the United States that Max Schiemann had successfully used them, despite Louis Lombard Gerin, and others, saying (perversely) that such things were unreliable for trolleybuses (for more, see pages 24 and 25).

General Electric did patent a single trolley boom design that showed similarities to Schiemann's implementation of 1907 onwards (see page 102 and subsequently). William Potter was one of those prodigious inventors who, over a forty year career, had over 90 devices registered, mostly for electric railways. Potter's 1909 trolleybus patent for GE had a radical sliding trolleyshoe that claimed, like many others, to be certain to remain in contact with the overhead wires. The material to be used by the sliding shoes was not specified but the enlarged insulating central fin was 'preferably of wood'. No details were given of the overhead hangers necessary to accommodate it. He had filed a similar patent in 1903, but now, perhaps due to experimentation, he extended the collector area and added the ability to swivel about a ball joint. For whatever reason, the patent was not granted until 1914, but it was precedent for what was to come.

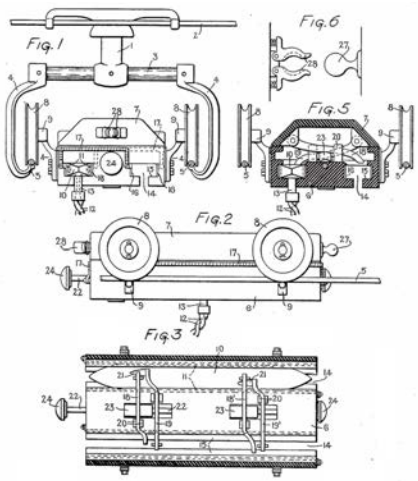

MM Wood's 1905 patent for an exchangeable overwire trolley that was assigned to the General Electric Company.

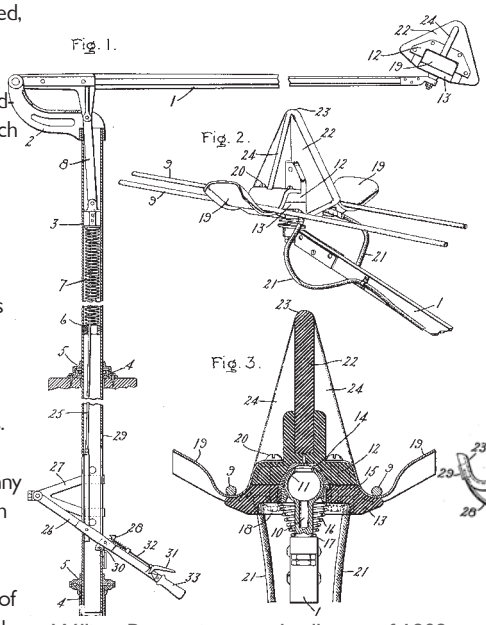

William Potters improved collector of 1909. A spring 'urged' the trolleyhead to be level about the ball joint above it. His simpler 1903 version is to the right, without the fin insulator.

Perhaps because GE's Thomas Edison had announced his new battery, a nickel-iron type using potassium hydroxide, to great fanfare in 1903, and then redesigned it between 1905 and 1908 to actually give the greater performance he had promised, General Electric seemingly lost interest in trackless trolleys. That is until 1920, when HL Andrews of the Railway and Traction Department of GE wrote an article on 'The Possibilities of the Trackless Trolley' which caused a great flurry of interest and a large number of patents, many of a single boom and double headed variety, including multiple applications from Westinghouse and Ohio Brass. Although the article talks of double boomed collectors, pivoted on a single base, the illustration of a (futuristic) 'trolley bus' seems to illustrate a design by Joseph Ledwinka (opposite) produced when working for the Trackless Trolley Company of America and patented in 1913. It uses 'spring bows' to support an insulated 'saddle' that includes two sliding shoes. Ledwinka had designed a hub motor in 1900 that was used in battery buses in Chicago, and later concentrated on car body design, working on the Chrysler Airflow and with Ferdinand Porsche on the VW 'Beetle'. It's not known if his minimalist design was ever built. As long as the spring bows remained intact in service,

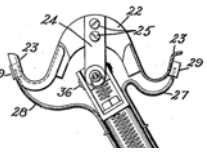

The illustration that accompanied HL Andrews influential article in the *Electric Railway Journal* of December 1920. Described as 'a design for 10,000lb trolley bus for thirty-four seated passengers' and shows considerable similarity to the Minneapolis Brills of 1922, and those of Petersburg, VA the following year.

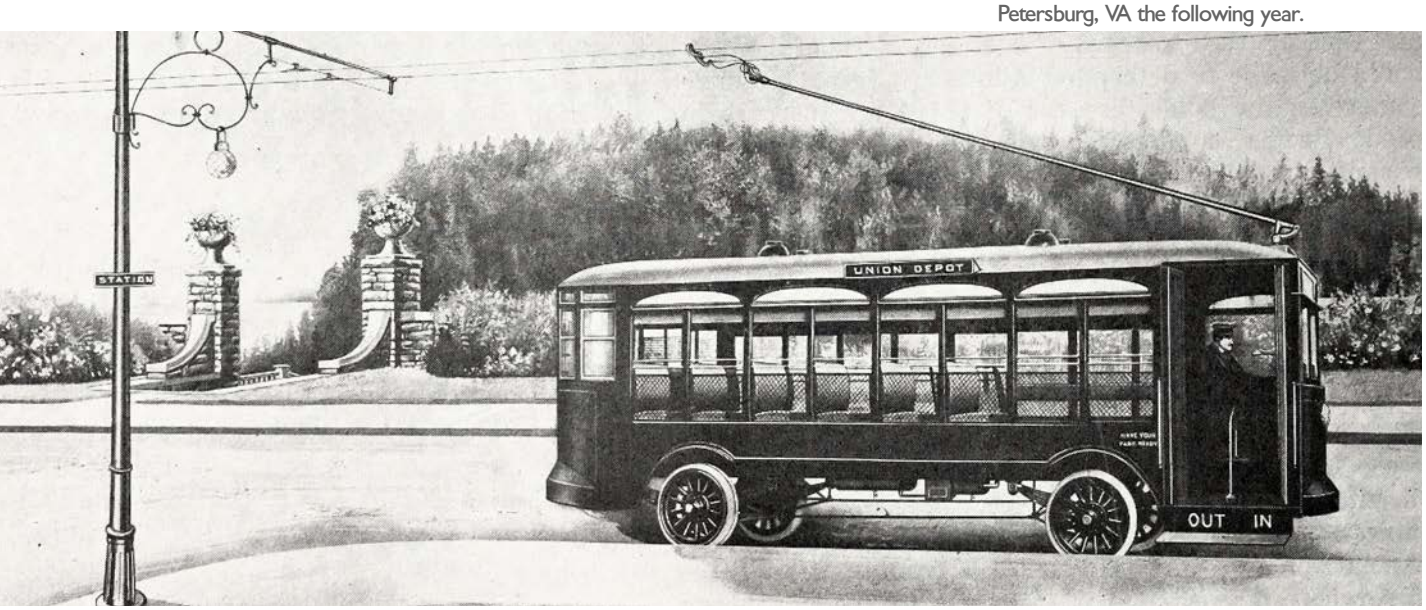

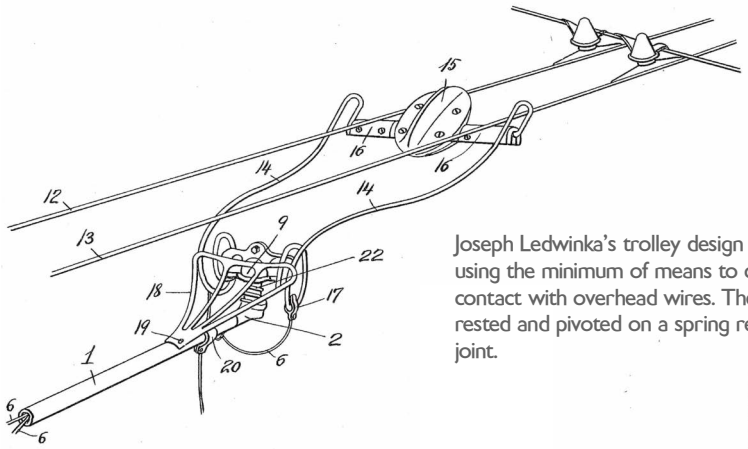

Joseph Ledwinka's trolley design of 1913, using the minimum of means to create flexible contact with overhead wires. The assembly rested and pivoted on a spring restrained ball joint.

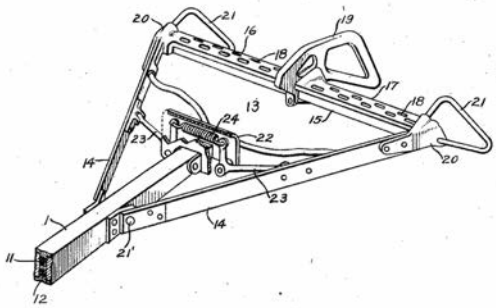

George Bowler's 1921 patent, granted in 1926, with pockets in the shoes for tallow or graphite lubrication. The trolleyhead tilted against springs at the end of the trolley pole but built examples differed in detail.

it would certainly have been flexible and lightweight and not suffered from much inertia - key features for successful trolleybus collectors.

The Andrews article, which described early systems and especially noted British progress, resulted in real schemes in the early 1920s, with Staten Island in 1921, Baltimore and Minneapolis in 1922, Rochester, Peterburg and Philadelphia in 1923, Cahoes in 1924 and demonstrations in Richmond in 1921, Los Angeles in 1922, Portsmouth, New York and Norfolk in 1923. All used two under-running trolleyheads with either single or double booms - George Bowler of GE patented one example that was used in Staten Island where General Electric also provided the overhead hardware. An experimental line in 1922 in Minneapolis used a single boom twin collector and also had a trailing tramway shoe but most used two booms or later converted to them.

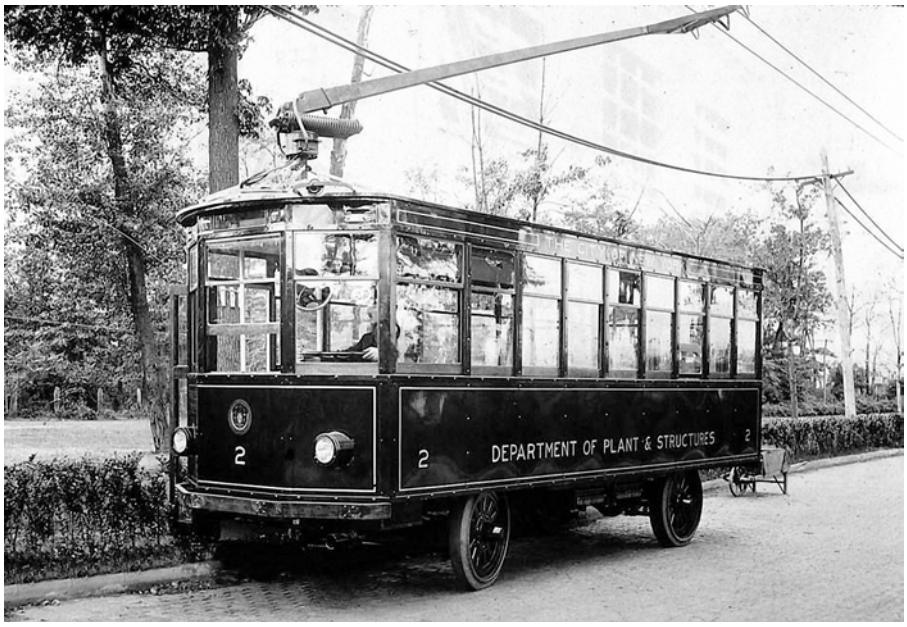

After testing on the 1/2 mile test line at GE's Schenectady plant, the 1921 prototype Atlas 'Trollicar', with 2 x GE 25hp motors and G Bowler's trolley, was joined by 7 production vehicles. Staten Island 2 is seen here at Sea View Hospital when new. The trolleygear was later moved back to the centre of the roof and then replaced by twin booms from 1922 onwards. Pneumatic tyres were also fitted later. The vehicles lasted until 1927. *Scalzo collection*

Minneapolis Brill 2 of Twin Cities Rapid Transit in 1922, fitted with the Ohio Brass single boom collector. *The JG Brill Company*

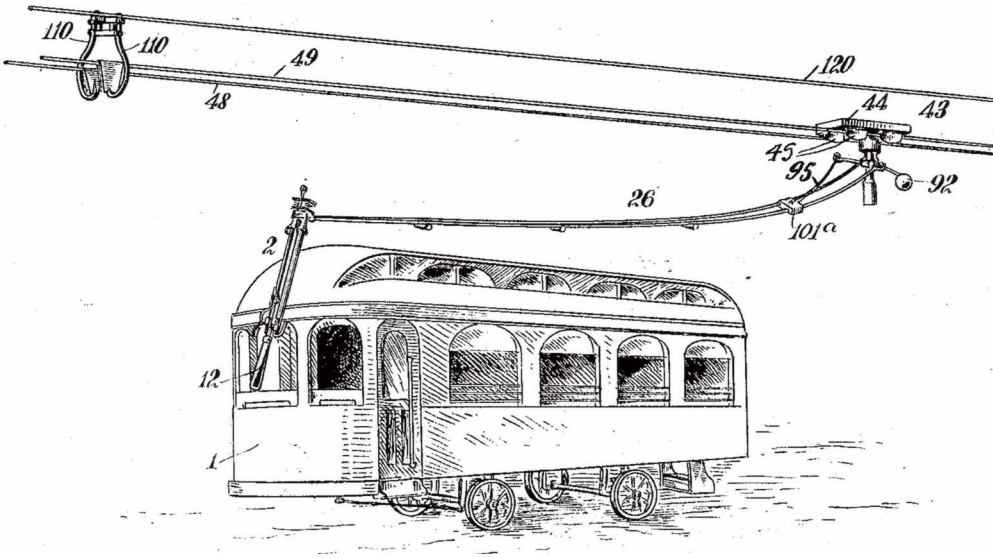

Charles Ahl's 1909 patent, granted in 1912, for an overwire trolley that tilted to allow it to be fitted onto the overhead and which was entirely detachable from the trolleybus by the driver to allow interchangeability with a similar vehicle coming in the opposite direction.

Despite evidence to contrary, inventors in America, (and in Italy, see page 136), perhaps influenced by Ludwig Stoll, still tried to introduce over-running collectors, even if only in patents. Charles Ahl of Salem, New Jersey, tried (see previous page) to solve the exchanging trolleys problem in a 1909 patent, that would have been heavy work for the drivers of two meeting vehicles.

Even after British trolleybuses had been using under-running trolleys for twenty years, James Morgan of Seattle patented a 'Flexible Trolley' in 1931 that could 'drive over to the curb' to pick up passengers. A rather naive design that seemed to have learnt little from previous experience and, despite tilting the riskily shallow trolley wheels into corners, to 'resist lateral pull', had no compensation for sudden movement apart, and the inventor doesn't mention this, for a swivelling roof mounted drum that spooled the interconnecting cable. Rather like Harvey Dibble's design of thirty years earlier (see page 23), it seems to show a theoretical patent rather than one based on physical trials.

Apart from industrial applications in mines and for cranes, the over-running trolley for electric buses seems to have had its day, ever since the end of the last Cedes-Stoll system in Vienna in 1938. For rigid under-running collectors, especially with the advent of the sliding carbon insert by London Transport in the same year, there have been a large number of detailed design refinements ever since, to create the proven technology of the most efficient public service vehicle ever devised. But then not having to carry any fuel, because it is (finally) effectively collected, makes that huge efficency advantage somewhat inevitable.

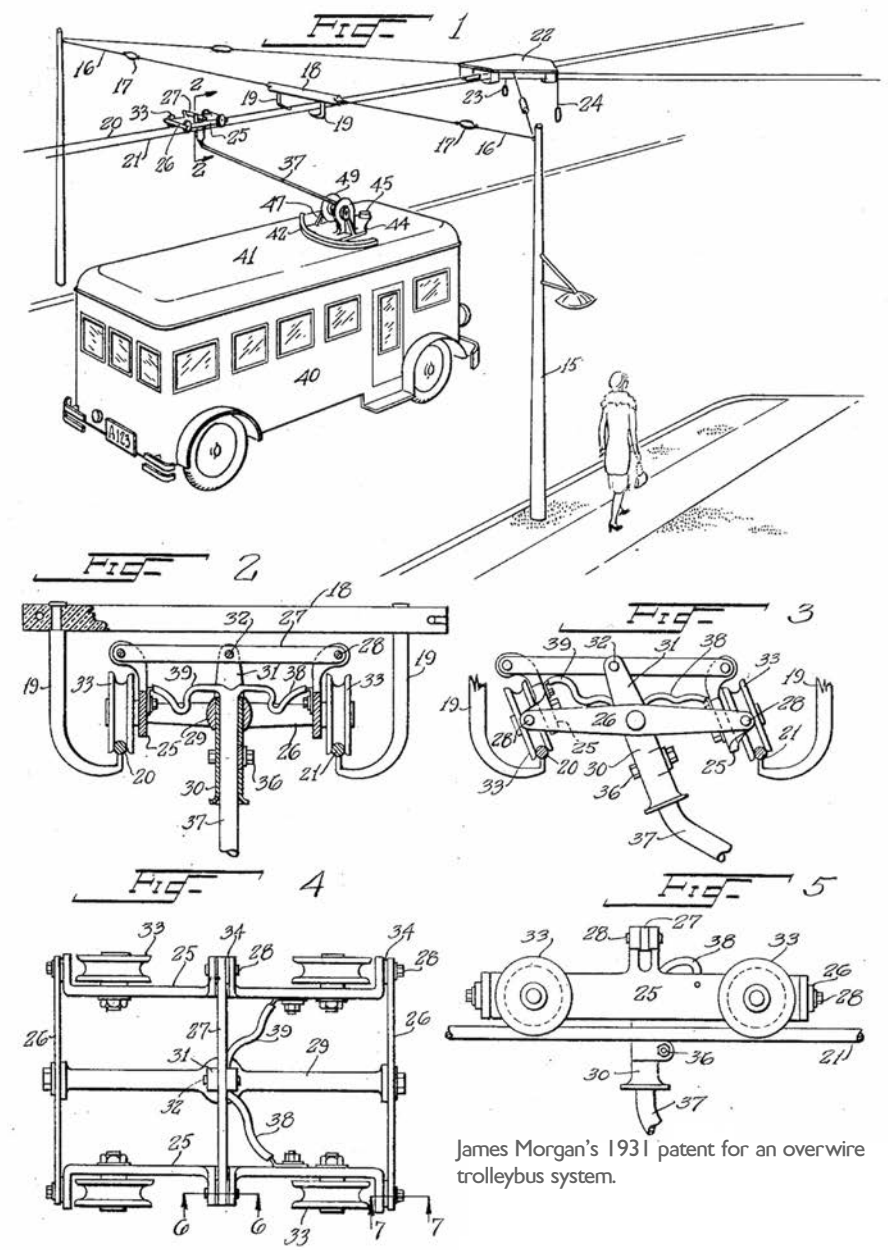

James Morgan's 1931 patent for an overwire trolleybus system.

A modern trolleybus overhead turning circle in Lucerne in 2013. *251Aloha*